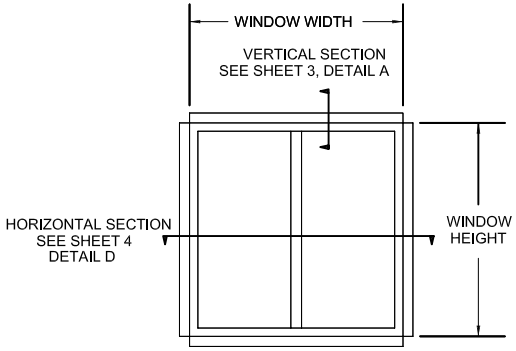


**ELEVATION - 2 TRACK**

(EXTERIOR)

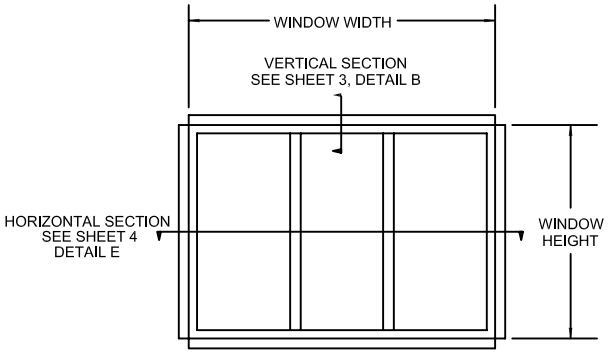


**ELEVATION - 3 TRACK**

(EXTERIOR)

NOTES:

1. THE PRODUCT SHOWN HEREIN IS TO BE INSTALLED ON ENCLOSURE THAT COMPLIES WITH THE 2007 FLORIDA BUILDING CODE WITH 2009 SUPPLEMENT.
2. INSTALLATION THRU WINDOW FRAME SHALL FOLLOW 2007 FLORIDA BUILDING CODE GUIDELINES INCLUDING THE 2009 SUPPLEMENT AS STATED IN SECTION 2003.7 FOR BOTH ANCHOR TYPE AND SPACING AS WELL AS SUPPORT SIMPLIFIED DESIGN WIND PRESSURES AS DETERIMED PER SECTION 1620 AND 1622.1.2. WIND SPEEDS OF 150MPH.
3. ENCLOSURE TO BE DESIGNED AND ANCHORED TO PROPERLY TRANSFER ALL LOADS TO STRUCTURE. ENCLOSURE IS THE RESPONSIBLITY OF THE ARCHITECT OR ENGINEER OF RECORD.
4. WINDOW VENTS SHALL BE REMOVED WHEN 3 SECOND GUSTS, V3S=75 MPH AS PER SECTON 1622.2.1 OF THE FLORDA BUILDING CODE. REMOVABLE PANELS SHALL BE INDENTIFIED AS REMOVABLE BY A DECAL. THE IDENTIFICATION DECAL SHALL ESSENTIALLY STATE: " Removable panel shall be removed when wind speeds, exceed 75 mph (34m/s)." DECALS SHALL BE PLACED SUCH THAT THE DECAL IS VISIBLE WHEN THE PANEL IS INSTALLED.
5. AN APPROVED MEMBRANE OR MATERIAL SHALL BE PLACED BETWEEN ALL DISSIMILAR METALS TO CONTROL GALVANIC CORROSION.
6. WINDOW FRAME AND VENT MATERIAL SHALL BE ALUMINUM ALLOY 6063-T5.
7. USE LATEX CAULK TO SEAL BEHIND FLANGES, BETWEEN COMPONENT SEAMS AND FRAME CORNERS. APPLICATION OF LATEX CAULK MUST COMPLY WITH SEALANT MANUFACTURER'S RECOMMENDATIONS.
8. #10 SMS SCREWS INSTALLATION ANCHORS MUST BE SPACED AS FOLLOW:
   HEAD AND SILL: 6" MAX. FROM CORNERS AND SPACED 12" MAX. O.C.
   SIDE JAMBS : 6" MAX. FROM CORNERS AND SPACED 21" MAX. O.C.
9. SECTION 1622.1, SCREEN ENCLOSURES FOR HVHZ OF THE 2009 SUPPLEMENTS ALLOW THE USE OF VINYL AND ACRYLIC.

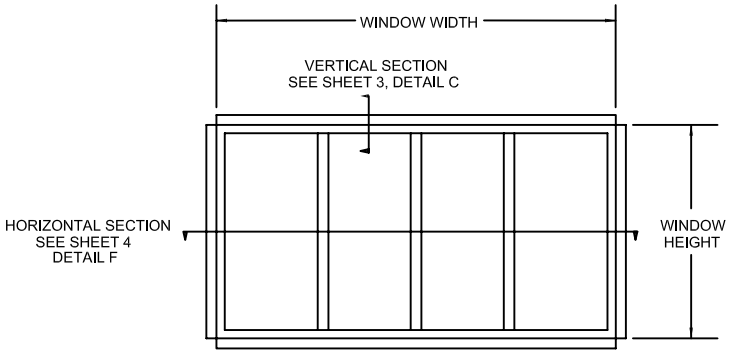


**ELEVATION - 4 TRACK**

(EXTERIOR)

* AS PER LATEST REVISION OF RULE 9B-72, WIND BREAKERS ARE NO LONGER REQUIRED TO BE FBC APPROVED.
RERERENCE 9B-72.010 (31) (b) WIND BREAKERS ARE NO LONGER A SUB CATEGORY

WINDOW CRAFTSMEN, INC.
6031 CLARK CENTER AVE.
SARASOTA, FLORIDA 34238

TITLE: 2, 3, AND 4 TRACK I.S.M. & O.S.M. HORIZONTAL ACRYLIC SLIDER
2, 3 & 4 PANEL CONFIG. NOTES AND ELEV.

| | | |
|---|---|---|
| ENGINEER: | DRAWN BY: MAS | DATE: 5/20/08 |
| DISCIPLINE: | SCALE: N.T.S. | DWG. NO. WCI-AS002 |
| FL. REG. NO.: | REV. LETTER: A | SHEET 1 |

PREPARED BY XTREMENGINEERING 3738 KINGSWOOD DRIVE, SARASOTA, FL 34232 PH. 941-343-0008

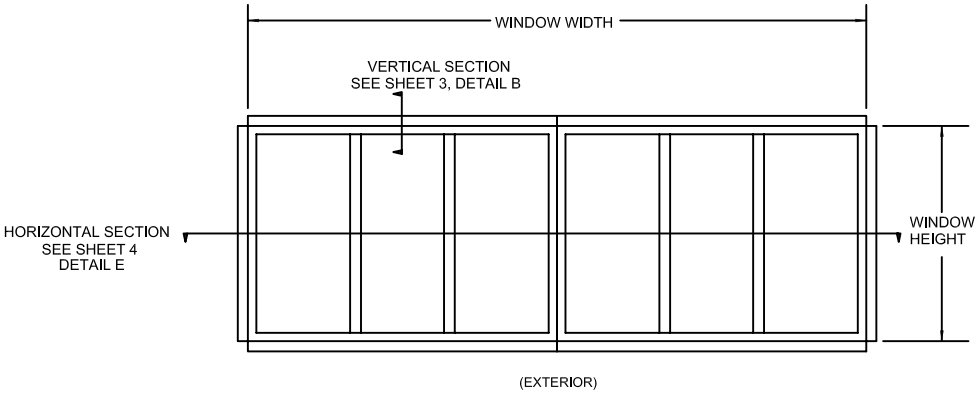


**ELEVATION - (TWO) 3 TRACK**

NOTES:

1. THE PRODUCT SHOWN HEREIN IS TO BE INSTALLED ON ENCLOSURE THAT COMPLIES WITH THE 2007 FLORIDA BUILDING CODE WITH 2009 SUPPLEMENT.
2. INSTALLATION THRU WINDOW FRAME SHALL FOLLOW 2007 FLORIDA BUILDING CODE GUIDELINES INCLUDING THE 2009 SUPPLEMENT AS STATED IN SECTION 2003.7 FOR BOTH ANCHOR TYPE AND SPACING AS WELL AS SUPPORT SIMPLIFIED DESIGN WIND PRESSURES AS DETERIMED PER SECTION 1620 AND 1622.1.2. WIND SPEEDS OF 150MPH.
3. ENCLOSURE TO BE DESIGNED AND ANCHORED TO PROPERLY TRANSFER ALL LOADS TO STRUCTURE. ENCLOSURE IS THE RESPONSIBLITY OF THE ARCHITECT OR ENGINEER OF RECORD.
4. WINDOW VENTS SHALL BE REMOVED WHEN 3 SECOND GUSTS, V3S=75 MPH AS PER SECTON 1622.2.1 OF THE FLORDA BUILDING CODE. REMOVABLE PANELS SHALL BE INDENTIFIED AS REMOVABLE BY A DECAL. THE IDENTIFICATION DECAL SHALL ESSENTIALLY STATE: " Removable panel shall be removed when wind speeds, exceed 75 mph (34m/s)." DECALS SHALL BE PLACED SUCH THAT THE DECAL IS VISIBLE WHEN THE PANEL IS INSTALLED.
5. AN APPROVED MEMBRANE OR MATERIAL SHALL BE PLACED BETWEEN ALL DISSIMILAR METALS TO CONTROL GALVANIC CORROSION.
6. WINDOW FRAME AND VENT MATERIAL SHALL BE ALUMINUM ALLOY 6063-T5.
7. USE LATEX CAULK TO SEAL BEHIND FLANGES, BETWEEN COMPONENT SEAMS AND FRAME CORNERS. APPLICATION OF LATEX CAULK MUST COMPLY WITH SEALANT MANUFACTURER'S RECOMMENDATIONS.
8. #10 SMS SCREWS INSTALLATION ANCHORS MUST BE SPACED AS FOLLOW:
   HEAD AND SILL: 6" MAX. FROM CORNERS AND SPACED 12" MAX. O.C.
   SIDE JAMBS : 6" MAX. FROM CORNERS AND SPACED 21" MAX. O.C.
9. SECTION 1622.1, SCREEN ENCLOSURES FOR HVHZ OF THE 2009 SUPPLEMENTS ALLOW THE USE OF VINYL AND ACRYLIC.

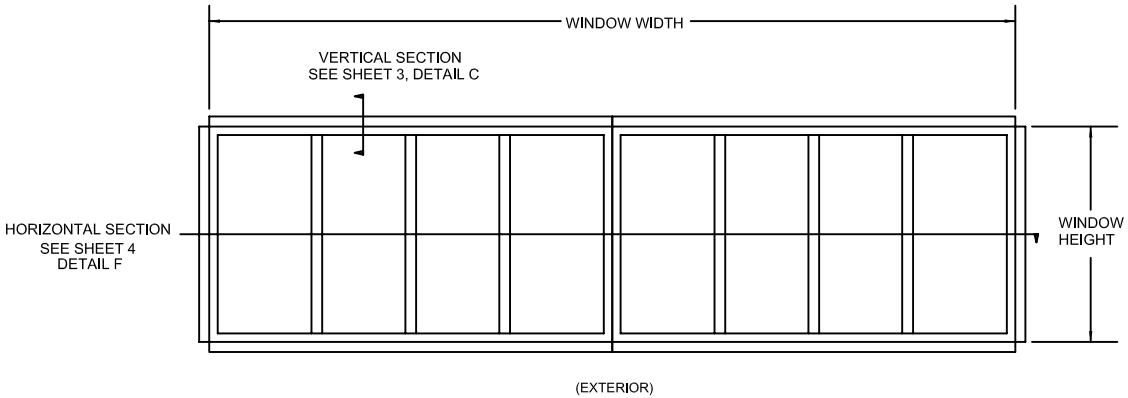


**ELEVATION - (TWO) 4 TRACK**

* AS PER LATEST REVISION OF RULE 9B-72, WIND BREAKERS ARE NO LONGER REQUIRED TO BE FBC APPROVED.
RERERENCE 9B-72.010 (31) (b) WIND BREAKERS ARE NO LONGER A SUB CATEGORY

| | | |
|---|---|---|
| WINDOW CRAFTSMEN, INC.<br>6031 CLARK CENTER AVE.<br>SARASOTA, FLORIDA 34238 | | |
| TITLE: 3, AND 4 TRACK I.S.M. & O.S.M. HORIZONTAL ACRYLIC SLIDER<br>6 & 8 PANEL CONFIG. NOTES AND ELEVATIONS | | |
| ENGINEER: MARK A. SMITH | DRAWN BY: MAS | DATE: 5/20/08 |
| DISCIPLINE: CIVIL | SCALE: N.T.S. | DWG. NO. WCI-AS002 |
| FL. REG. NO.: 55511 | REV. LETTER: A | SHEET 2 |

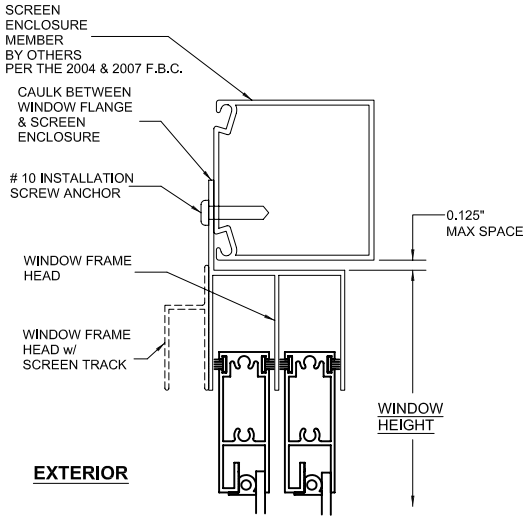


A 1,2 **VERTICAL SECTION**
2 TRACK (OUTSIDE MOUNT SHOWN / INSIDE MOUNT SIMILAR)

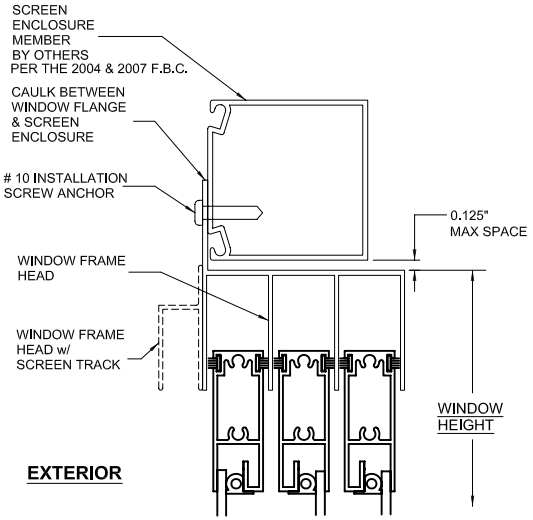


B 1,2 **VERTICAL SECTION**
3 TRACK (OUTSIDE MOUNT SHOWN / INSIDE MOUNT SIMILAR)

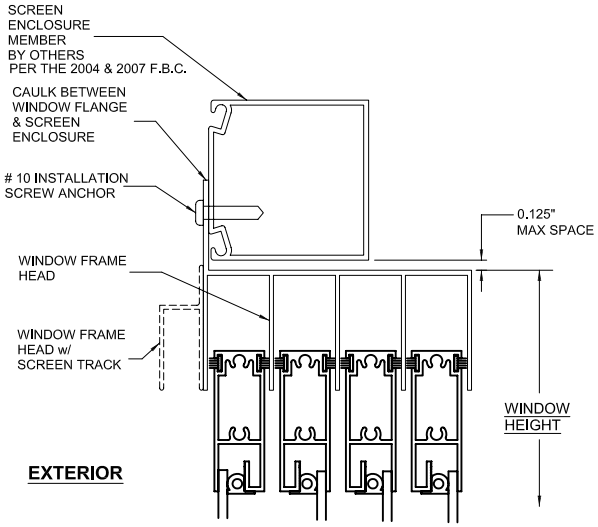


C 1,2 **VERTICAL SECTION**
4 TRACK (OUTSIDE MOUNT SHOWN / INSIDE MOUNT SIMILAR)

| | | |
|---|---|---|
| WINDOW CRAFTSMEN, INC.<br>6031 CLARK CENTER AVE.<br>SARASOTA, FLORIDA 34238 | | |
| TITLE: 2, 3, AND 4 TRACK I.S.M. & O.S.M. HORIZONTAL ACRYLIC SLIDER VERTICAL SECTIONS | | |
| ENGINEER: | DRAWN BY: MAS | DATE: 5/20/08 |
| DISCIPLINE: | SCALE: N.T.S. | DWG. NO. WCI-AS002 |
| FL. REG. NO.: | REV. LETTER: A | SHEET 3 |

PREPARED BY XTREMENGINEERING 3738 KINGSWOOD DRIVE, SARASOTA, FL 34232 PH. 941-343-0008

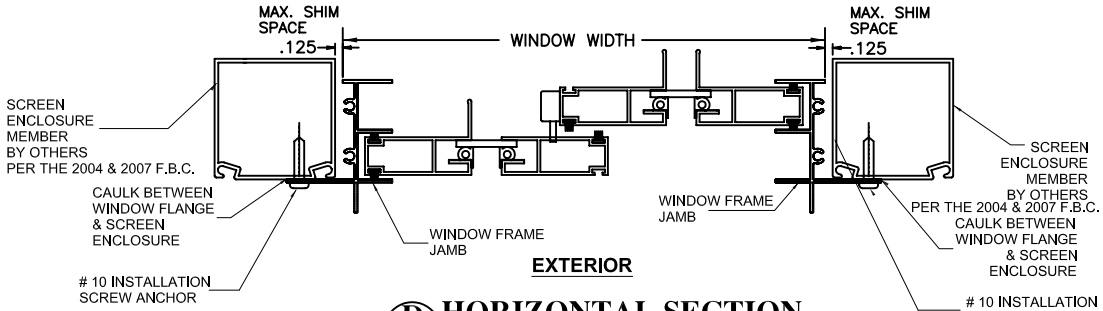


## D 1,2 HORIZONTAL SECTION

2 TRACK (OUTSIDE MOUNT SHOWN / INSIDE MOUNT SIMILAR)

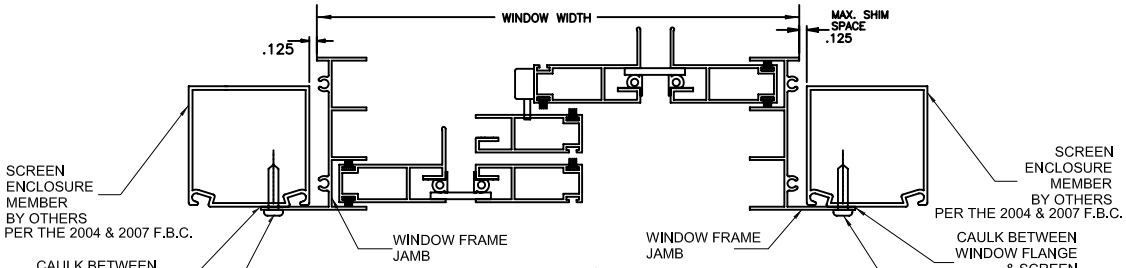


## E 1,2 HORIZONTAL SECTION

3 TRACK (OUTSIDE MOUNT SHOWN / INSIDE MOUNT SIMILAR)

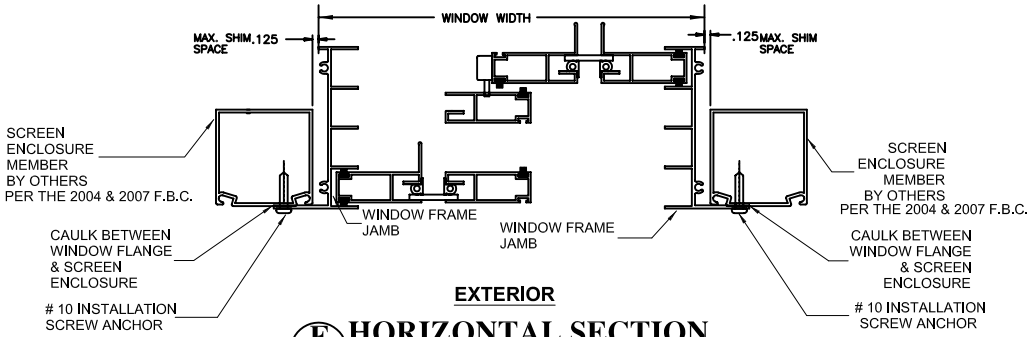


## F 1,2 HORIZONTAL SECTION

4 TRACK (OUTSIDE MOUNT SHOWN / INSIDE MOUNT SIMILAR)

WINDOW CRAFTSMEN, INC.
6031 CLARK CENTER AVE.
SARASOTA, FLORIDA 34238

| | | |
|---|---|---|
| TITLE: 2, 3 & 4 TRACK I.S.M. & O.S.M. HORIZONTAL ACRYLIC SLIDER HORIZONTAL SECTIONS | | |
| ENGINEER: | DRAWN BY: MAS | DATE: 5/20/08 |
| DISCIPLINE: | SCALE: N.T.S. | DWG. NO. WCI-AS002 |
| FL. REG. NO.: | REV. LETTER: A | SHEET 4 |